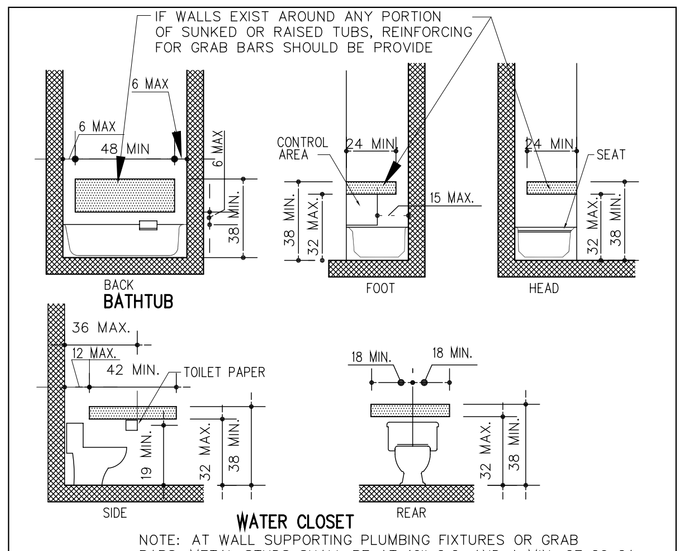

NOTE: AT WALL SUPPORTING PLUMBING FIXTURES OR GRAB BARS, METAL STUDS SHALL BE AT 16" O.C. AND A MIN. OF 20 GA. PROVIDE MANUFACTURED FORMED METALPLATE OR 2x WOOD BLOCKING REINFORCEMENT ATTACHED TO STUDS FOR SUPPORT OF FIXTURES OR GRAB BARS. AS PER FHA REQUIREMENTS.

18 GRAB BAR DETAILS
N.T.S.

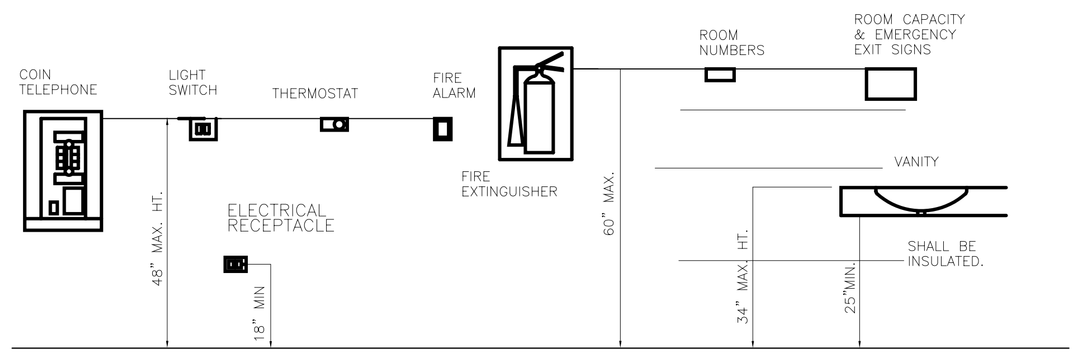

17 MOUNTING HEIGHT DETAILS
N.T.S.

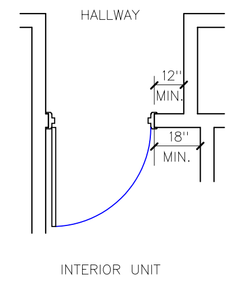

16 REQUIRED DOOR CLEARANCE
N.T.S.

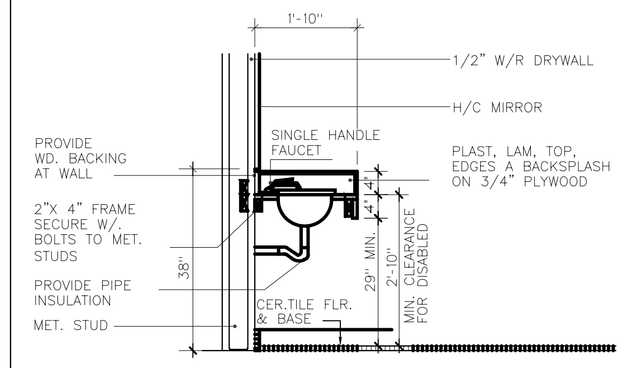

15 TYP. DISABLE VANITY DETAIL
N.T.S.

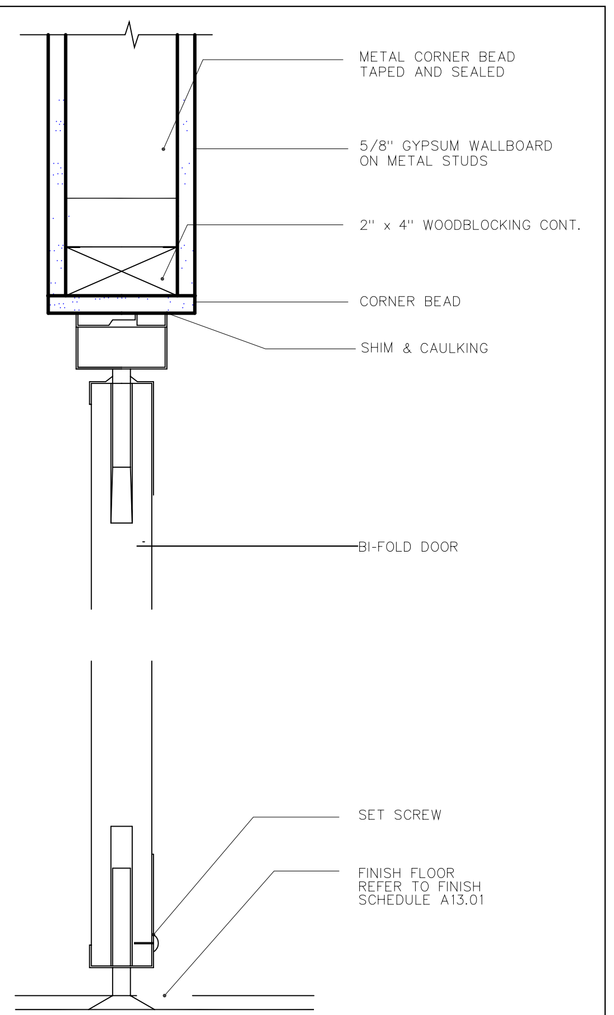

10 HEAD/SILL BIFOLD DETAIL
N.T.S.

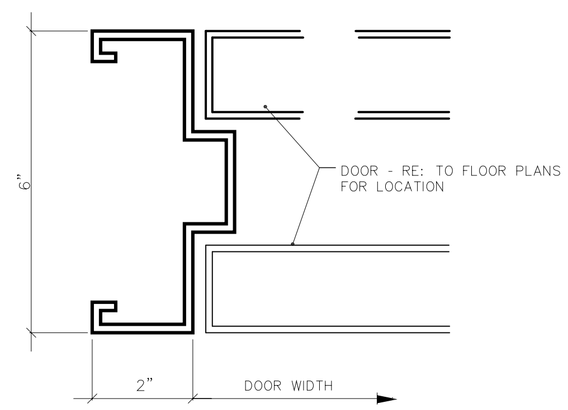

14 JAMB DETAIL
N.T.S.

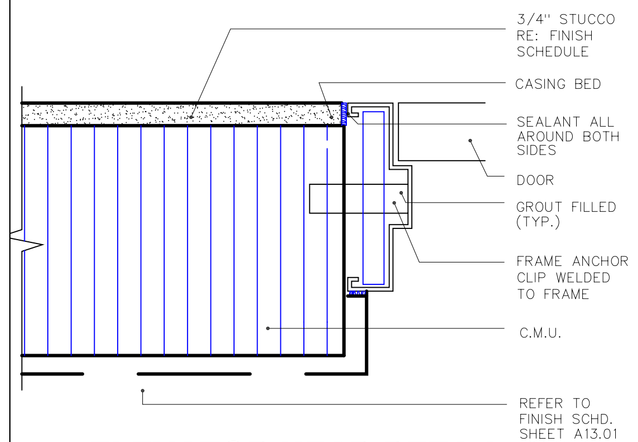

13 ELEVATOR HEAD DETAIL
N.T.S.

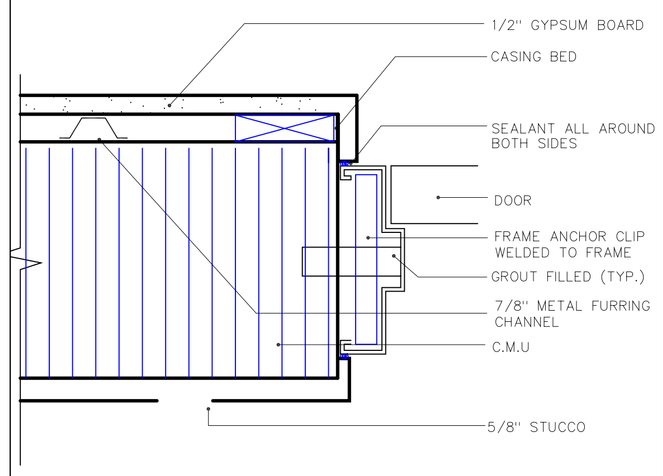

12 ELEVATOR SILL DETAIL
N.T.S.

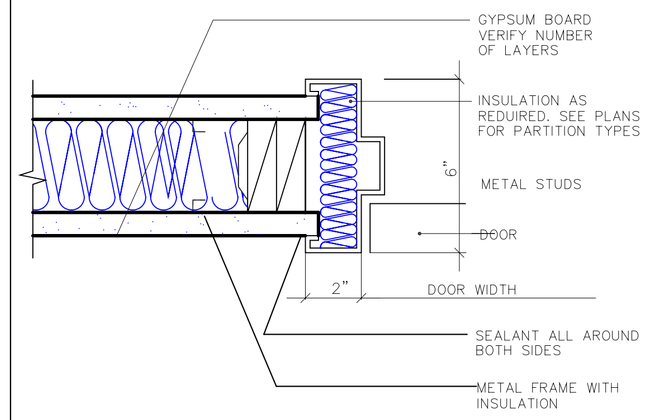

18 ROOF THRESHOLD DETAIL
N.T.S.

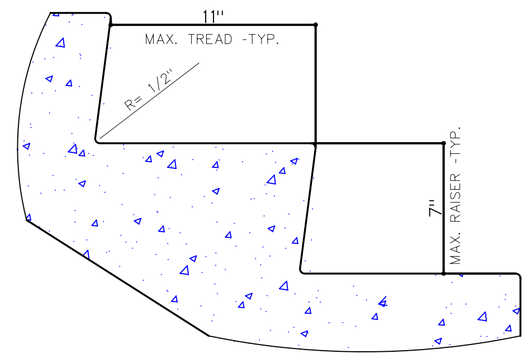

9 ENTRY JAMB CLADDING DETAIL
N.T.S.

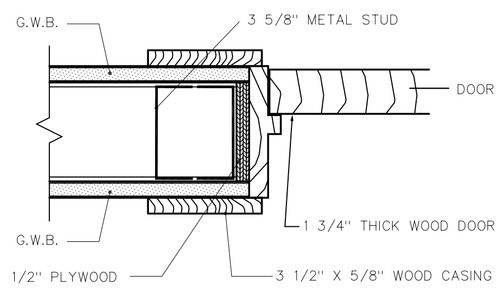

8 WOOD DOOR JAMB (INT. UNIT)
N.T.S.

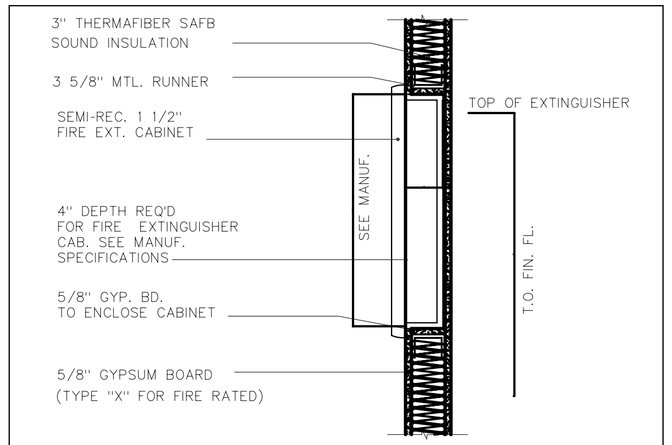

* PROVIDE 1 HR. FIRE RATED CABINET WHERE RECESSED INTO UNIT WALL AND 2 HR. WHERE RECESSED INTO A SHAFT WALL

7 FIRE EXTINGUISHER CAB. DETAIL
N.T.S.

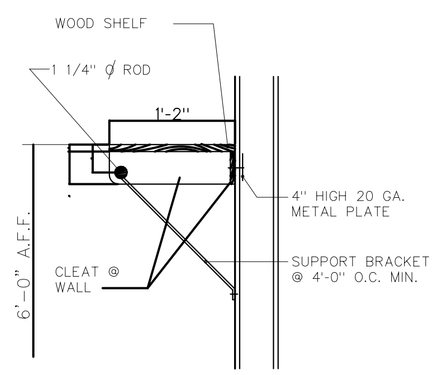

6 ROD & SHELF DETAIL
N.T.S.

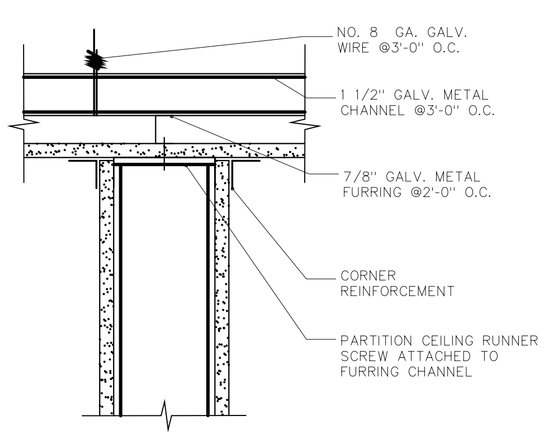

5 CONTINOUS CEILING
N.T.S.

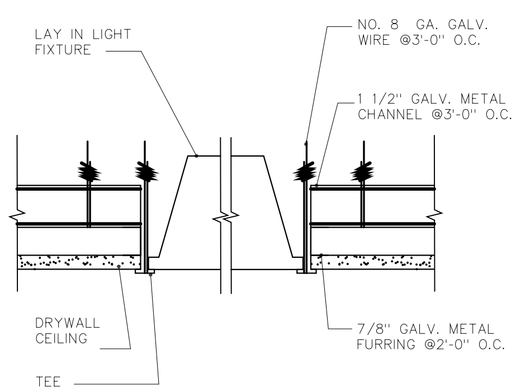

4 DROP-IN FIXTURE @ CEILING
N.T.S.

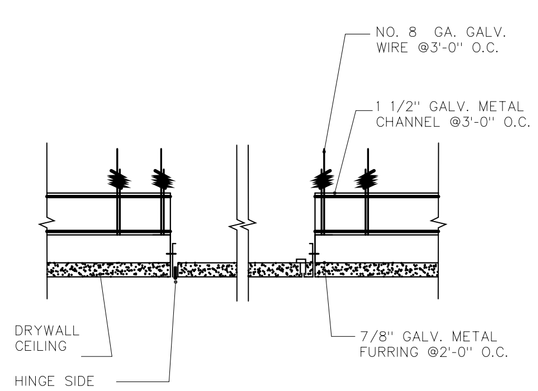

3 METAL ACESS DOOR
N.T.S.

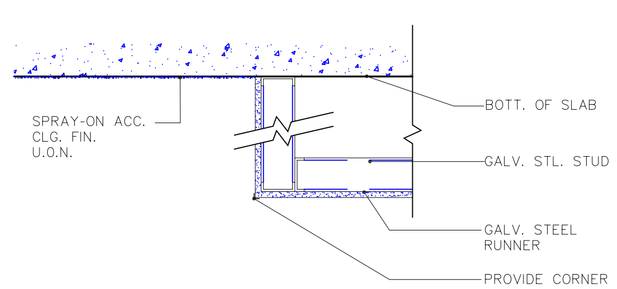

2 DROP CEILING DETAIL
N.T.S.

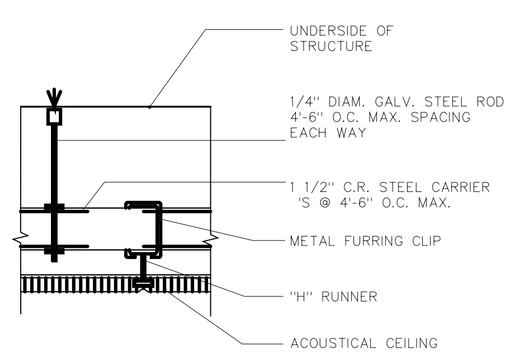

1 TYPICAL ACOUSTICAL CEILING
N.T.S.

RAMOS*MARTINEZ*
A R C H I T E C T S , I N C. AA 26000528

MIAMI
8211 N.W. 72th AVENUE
Miami, FL 33166

TELEPHONE: 305-558-3006
FACSIMILE: 305-558-3207
WEBSITE: www.rmarc.com

NEW YORK
1 GREENE STREET
JERSEY CITY, NJ 07302

HUMBERTO RAMOS
AR 0017833

First Haitian Free Church of Nazarene by Faith
IN
ORLANDO, FLORIDA

FIRST HAITIAN FREE CHURCH OF NAZARENE

308 SOUTH ORANGE BLOSSOM TRAIL
ORLANDO, FLORIDA

DETAILS

REVISIONS:
1 Building Department Comments 05/21/09

COMM. NO. 08-103
DATE:
DRAWN BY:
CHECKED BY:

1

A-11.1

COPYRIGHT - 2008 - **RAMOS*MARTINEZ*** architects, inc.
All ideas, designs and details indicated or represented by this drawing, created and developed for use on this project, are owned by, and are legal property of RamosMartinez Architects, Inc. Use, reproduction, distribution or alteration is prohibited without written authorization from the Architect.