COPYRIGHT - 2008 - RAMOSMARTINEZ architects, inc.
All ideas, designs and details indicated or represented by this drawing, created and developed for use on this project, are owned by, and are legal property of RamosMartinez Architects, Inc. Use, reproduction, distribution or alteration is prohibited without written authorization from the Architect.

NOTE:
SEE O'KEEFFE'S LQADDERS FOR DETAILS:
503 TUBULAR RAIL WITHPLATFORM AND RETURN.

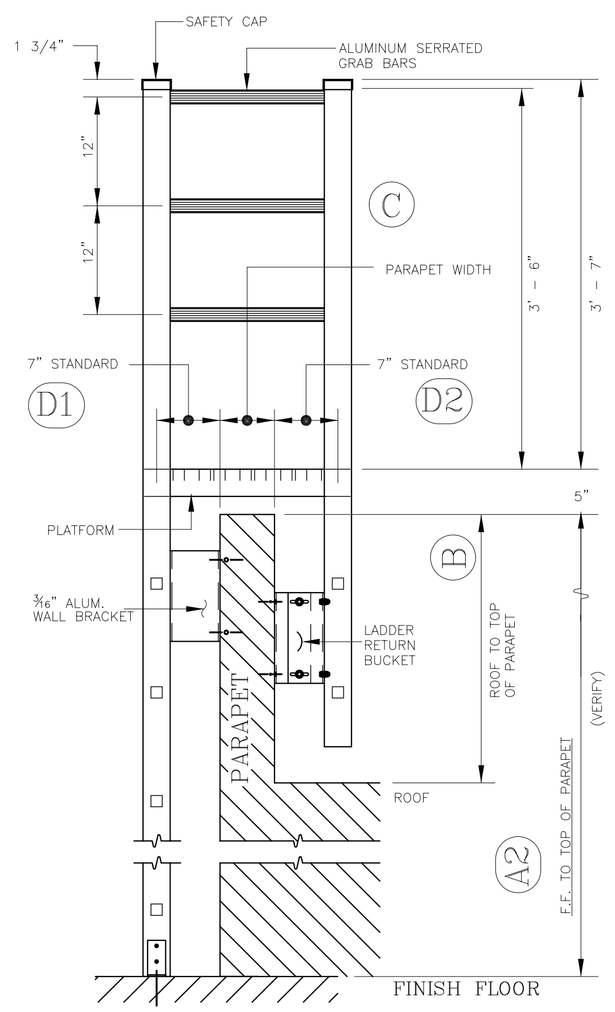

SIDE LADDER DETAIL

N.T.S.

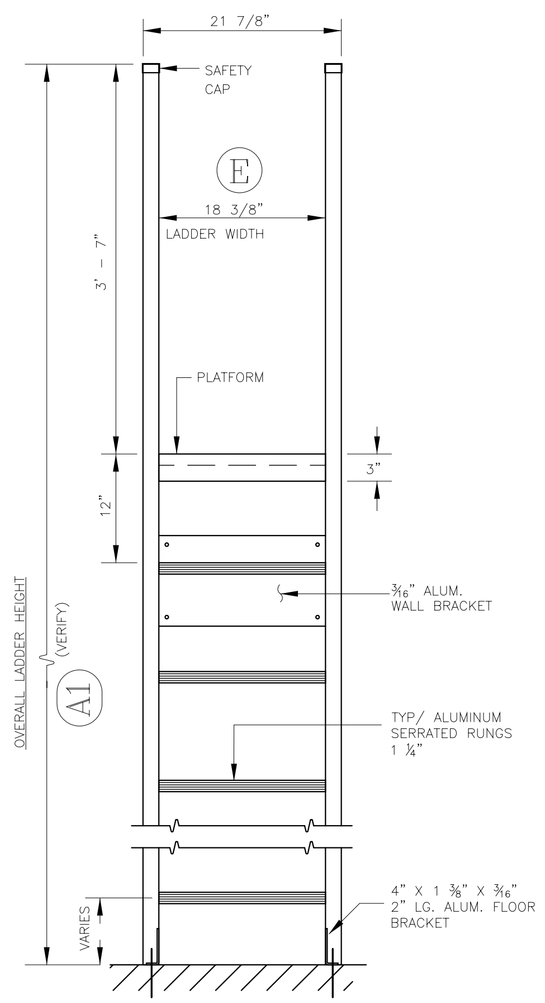

FRONT LADDER DETAIL

3 *N.T.S.*

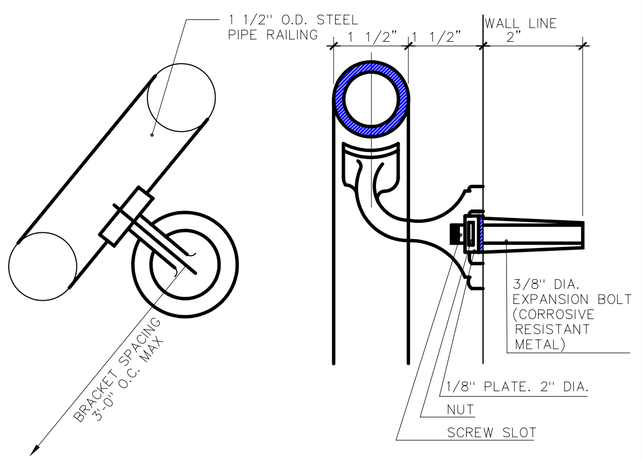

HANDRAIL WALL BRACKET DTL.

7 *N.T.S.*

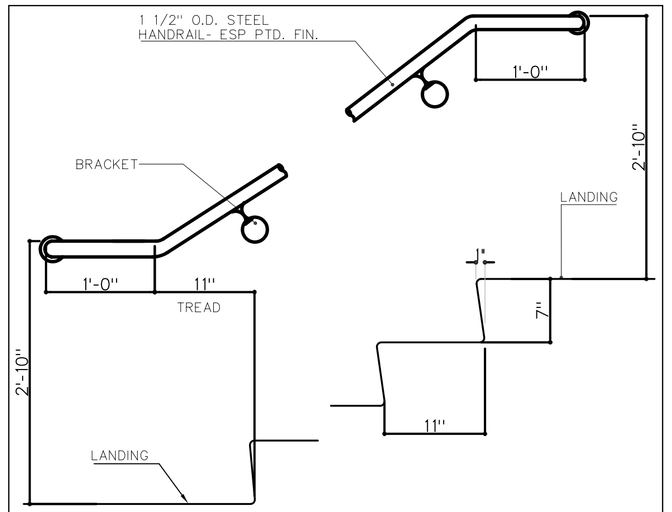

TYP. WALL HANDRAIL DETAIL

6 *N.T.S.*

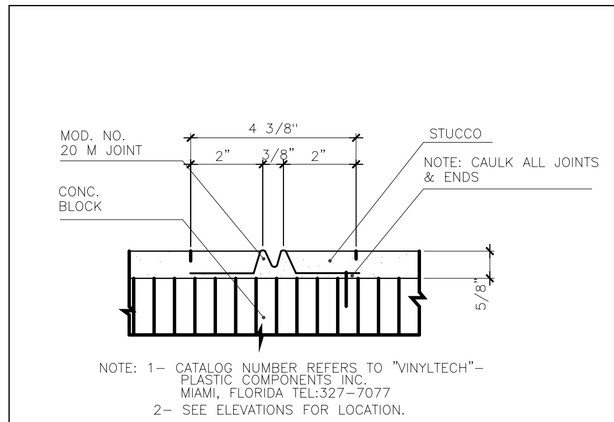

STUCCO CONTROL JOINT

5 *N.T.S.*

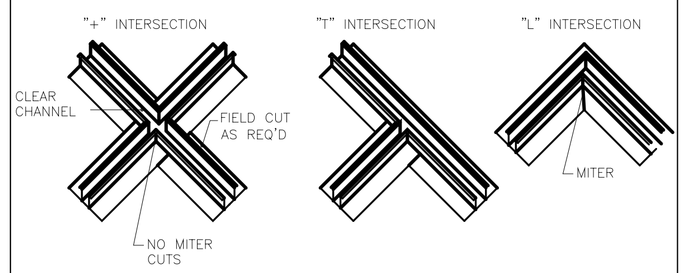

PVC INTERSECTION DETAIL

4 *N.T.S.*

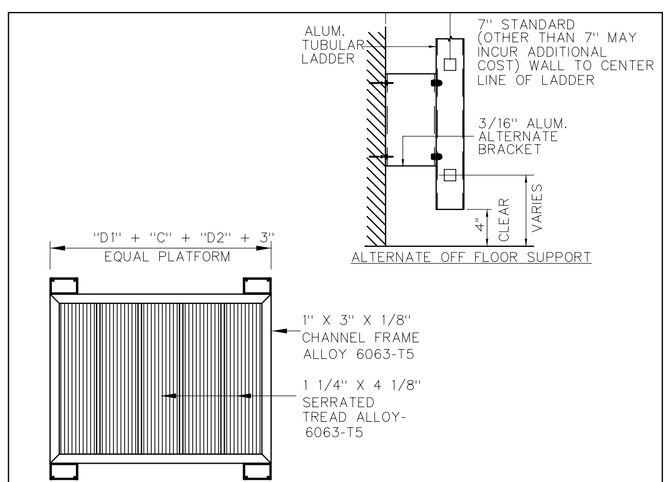

PLATFORM DESIGN & ALT. OFF FLOOR SUPPORTS

2 *N.T.S.*

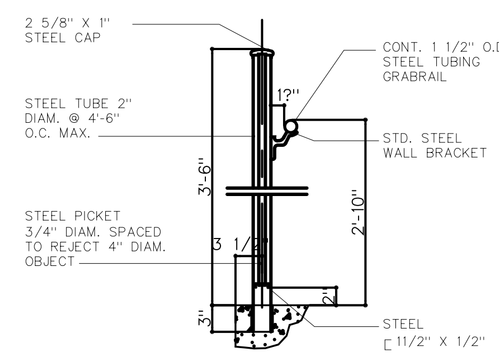

SECTION THRU RAILING

1 *N.T.S.*

GUIDELINES FOR ACCESSIBILITY TO PHYSICALLY DISABLED PERSONS

1. FOR THE CONVENIENCE OF THE PHYSICALLY DISABLED, WASHROOM ACCESSORIES SHOULD BE MOUNTED SO THAT OPERATING AREAS SUCH AS COIN SLOTS, PUSHBUTTONS, OPENING FOR TOWELS & WASTE ARE NO MORE THAN 40" ABOVE FIN. FLOOR.
2. FOR THE SAFETY OF THE BLIND, OBJECTS BELOW 6'-6" WHICH PROTRUDE MORE THAN 4" MUST CONTINUE TO THE FLOOR SO THAT THEY MAY BE DE-DETECTED BY A PERSON USING A CANE OR SEEING EYE DOG.
3. LAVATORY AT EACH WASHROOM SHOULD PROVIDE:
   A. A MINIMUM CLEARANCE OF 24" FROM FIN. FLOOR TO APRON.
   B. A MAXIMUM HEIGHT OF 34" FROM FIN. FLOOR TO TOP OF VANITY.
   C. INSULATED HOT WATER & DRAINPIPES IF THE WATER EXCEEDS 120d. F.
   D. A SOAP DISPENSER WHICH CAN BE OPERATED WITH ONE HAND.
   E. SINGLE LEVER FAUCET CONTROL FOR HOT & COLD WATER.
4. TOILET COMPARTMENTS FOR THE DISABLED SHOULD COMPLY W/ THE GUIDELINES OF THE F.A.C.B.C. 1997 EDITION. MIN. CLEAR @ DOOR SHALL BE 32" WIDE MIN. TOILET SHOULD BE 20" IN HEIGHT FROM FINISH FLOOR TO TOP OF TOILET SEAT.
5. GRAB BARS SHOULD BE MOUNTED HORIZONTALLY AT A HEIGHT OF 36" FROM FIN. FLOOR & SHOULD BE 1 1/2" IN DIAMETER WITH 1 1/2" CLEARANCE BETWEEN GRAB BAR & WALL, 24" MIN. LENGTH.
6. ACCESSORIES WITHIN A TOILET COMPARTMENT SHOULD BE LOCATED BELOW THE GRAB BAR.

RAMOSMARTINEZ
A R C H I T E C T S, I N C. AA 26000528

MIAMI
521 N.W. 12th AVENUE
MIAMI, FL 33136

TELEPHONE: 305-548-3006
FACSIMILE: 305-548-3220
WEBSITE: www.rmatrj.com

NEW YORK
11 ERIE STREET
JERSEY CITY, NJ 07302

HUMBERTO RAMOS
AR 0017833

First Haitian Free Church of Nazarene by Faith
IN
ORLANDO, FLORIDA

FIRST HAITIAN FREE CHURCH OF NAZARENE

308 SOUTH ORANGE BLOSSOM TRAIL ORLANDO, FLORIDA

DETAILS
1 Building Department Comments 052109

REVISIONS:

COMM. NO. 08-103
DATE:
DRAWN BY: RR
CHECKED BY:

1

A-11.3