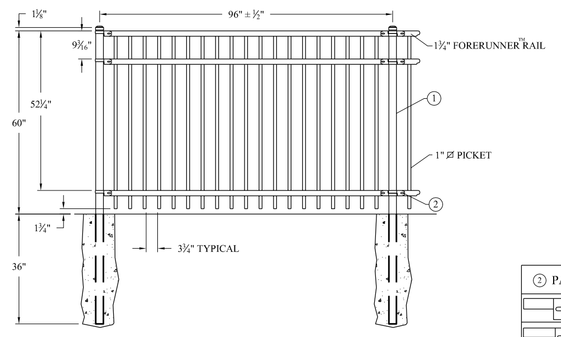

② PANEL BRACKET OPTIONS		① POST TO POST 8' NOMINAL	
	BX302 UNIVERSAL BOULEVARD BRACKET (AS SHOWN)	*96" ± ½"	2½"⌀
	BX303 UNIVERSAL BOULEVARD BRACKET	*96½" ± ½"	3"⌀
	BX301 FLAT MOUNT BRACKET	*96" ± ½"	2½"⌀
		*96½" ± ½"	3"⌀
	BX304 SWIVEL BRACKET**	*96" ± ½"	2½"⌀
		*96½" ± ½"	3"⌀

*NOTE: When using swivel brackets on either or both ends of a panel installation, care must be taken to retain the spacing between post and adjoining jackets meets applicable codes. This may require trimming one or both ends of the panel as needed.

POST NOTE: In locations subject to freezing, where posts are grouted into core-drilled holes, a 12" diameter hole should be drilled in the post approximately 27" above elevation to allow for drainage of built-up ground water. The drilled hole must be wiped clean and dry and sprayed with AMERISTAR® zinc rich primer and AMERISTAR® color match finish.

FROST LINE: Footer depth shown is minimum recommendation. In some cases local restrictions or freezing weather conditions may require a greater depth.

**PANEL RAKING: Drawing shows fence panel at level ground elevation. for installations that must be raked to follow sloping grades, the post spacing dimension shown must be measured along the grade.

Title:
ECHELON II PANEL MAJESTIC 3R EXT 4"GAP 5'H 8'W

Drawing Number: 27-100-0042	Old Part Number: 2AMX30588	
DR: AR	SH . 1of 1	SCALE: DO NOT SCALE
CK: RTM	Date 02/19/07	REV: a

AMERISTAR®
1555 N. Mingo
Tulsa, OK 74116
1-888-333-3422

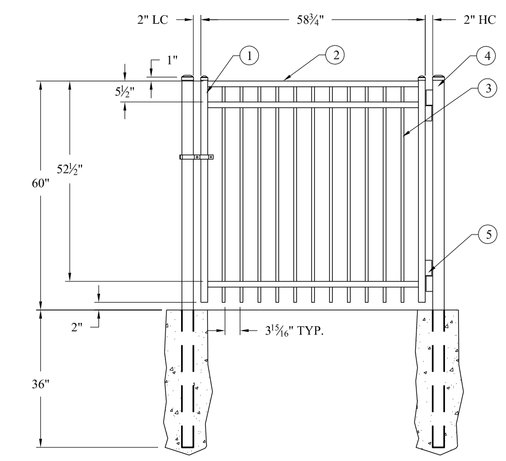

1. 1½"⌀x 14 ga. GATE END
2. RIBBED CHANNEL RAIL 1⁷⁄₁₆" x 1½" x 14 ga.
3. ¾"⌀x 16 ga. PICKET
4. 3" ⌀x 12 ga. POST
5. GATE HARDWARE: SGXSX3

POST NOTE: In locations subject to freezing, where posts are grouted into core-drilled holes, a 12" diameter hole should be drilled in the post approximately 27" above elevation to allow for drainage of built-up ground water. The drilled hole must be wiped clean and dry and sprayed with AMERISTAR zinc rich primer and AMERISTAR color match finish.

FROST LINE: Footer depth shown is minimum recommendation. In some cases local restrictions or freezing weather conditions may require a greater depth.

Title:
MONTAGE PLUS SWING MAJESTIC 3 RAIL 4 IN GAP 5 FT H 5 FT OPENING SGL GATE

Drawing Number: 11-200-0640	Old Part Number: 1WMX358-60	
DR: RTM	SH . 1of 1	SCALE: Do Not Scale
CK:	Date 3/9/07	REV: a

AMERISTAR®
1555 N. Mingo
Tulsa, OK 74116
1-888-333-3422

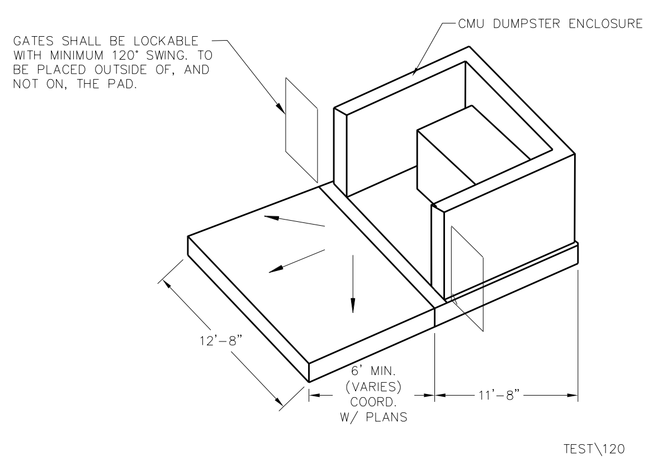

DUMPSTER PAD DETAIL
N.T.S.

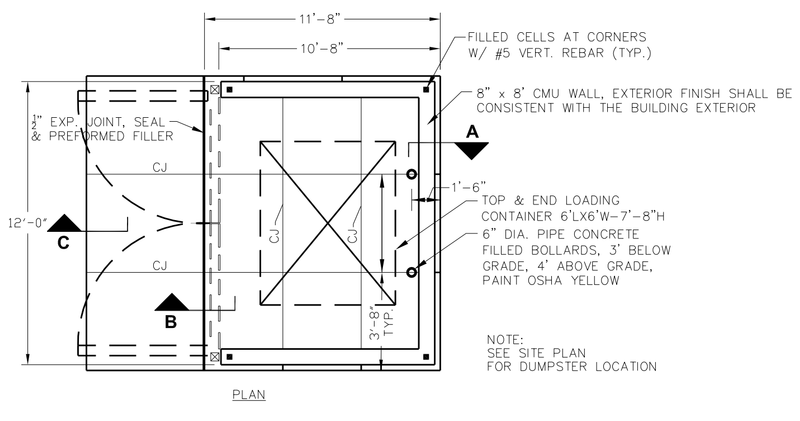

DUMPSTER PAD DETAIL
N.T.S.

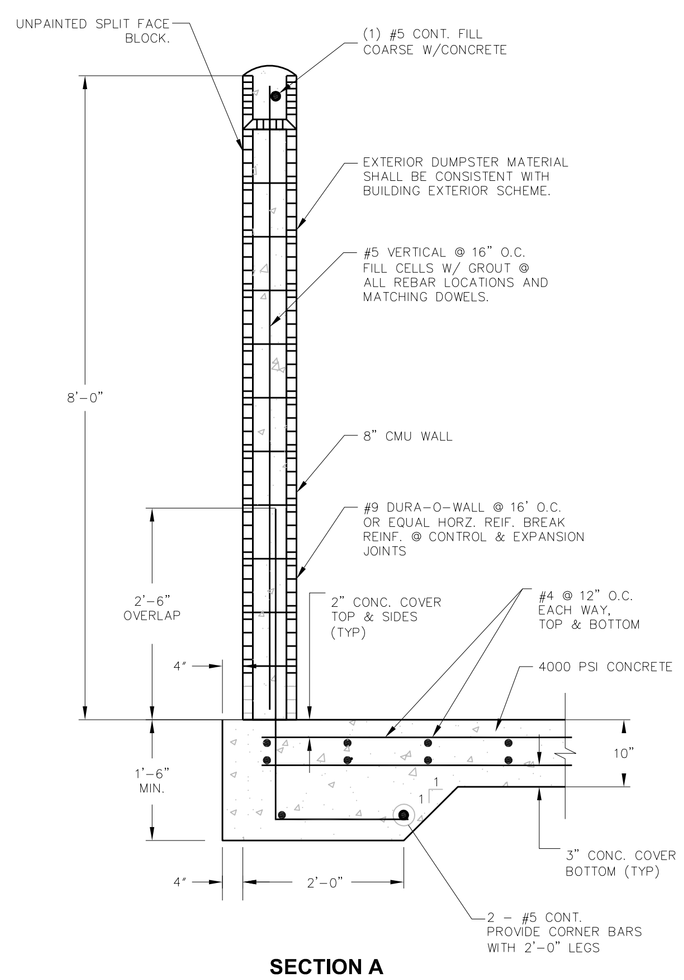

SECTION A
DUMPSTER ENCLOSURE
N.T.S.

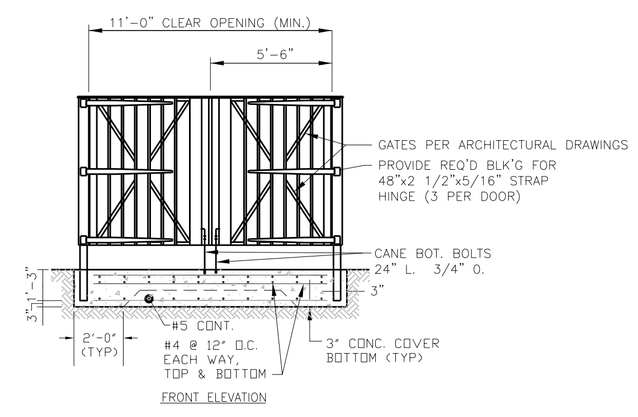

DUMPSTER GATE DETAIL
N.T.S.

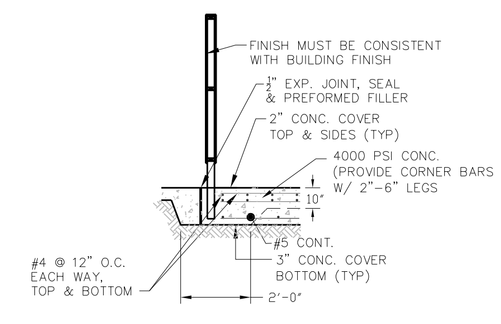

SECTION B
TRASH DUMPSTER GATE
N.T.S.

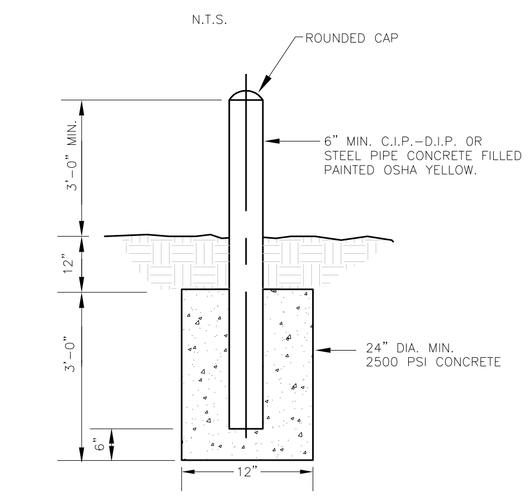

DEPENDING UPON THE FACILITY/DEVICE TO BE PROTECTED LARGER BOLLARDS AND CONCRETE ANCHORS MAY BR REQUIRED.

BOLLARD DETAIL
N.T.S.

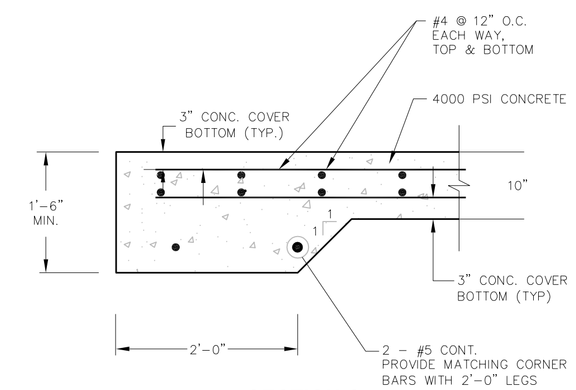

SECTION C
TYP. TURN-DOWN-SLAB EDGE
N.T.S.

REVISIONS

No.	DATE	DESCRIPTION	APP'D BY
1	03-31-09	CITY OF ORLANDO COMM.	QTL
2	05-11-09	ADD OUC NOTES	QTL
3	08-04-09	CITY OF ORLANDO COMM. (BLD2009-03635)	QTL
4	09-18-09	CITY OF ORLANDO BLD2009-00444 COMM.	QTL
5	10-02-09	FDOT UTILITY PERMIT	QTL

FIRST HAITIAN FREE CHURCH OF NAZARENE BY FAITH RENOVATION

SITE DETAILS

LAM Civil Engineering, Inc.
2504 E. JACKSON STREET
ORLANDO, FL 32803
OFFICE: 407-228-9540
FAX: 407-228-9541
CERTIFICATE OF AUTHORIZATION No. 27340

THIS DOCUMENT AND ANY DESIGN DOCUMENTS RELATED TO THIS PROJECT IS THE PROPERTY OF LAM CIVIL ENGINEERING, INC. AND IS COPYRIGHTED. THIS DOCUMENT IS INTENDED TO BE USED BY THIS PROJECT, ANY REPRODUCTION, DISTRIBUTION, OR USE OF THIS DOCUMENT IS PROHIBITED WITHOUT THE WRITTEN CONSENT OF LAM CIVIL ENGINEERING, INC.

NOT FOR CONSTRUCTION UNLESS SIGNED AND SEALED

QUANG T. LAM, P.E.
FL REGISTRATION No. 62550

DATE

PROJECT No.	2008.999.07
DATE:	11-05-09
DRAWN BY:	LCE
APPROVED BY:	QTL
SHEET	C5.1