## SERVICE LINE DETAILS

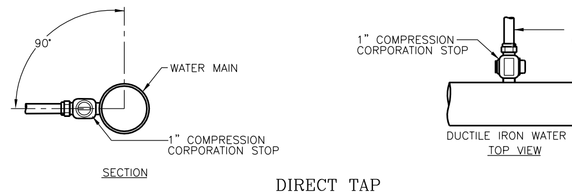


DIRECT TAP

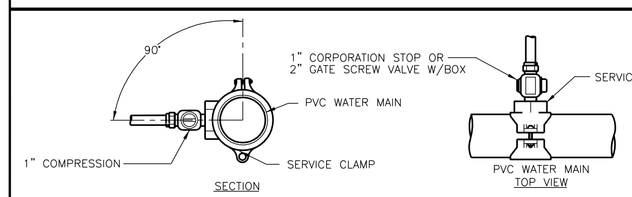


SERVICE CLAMP

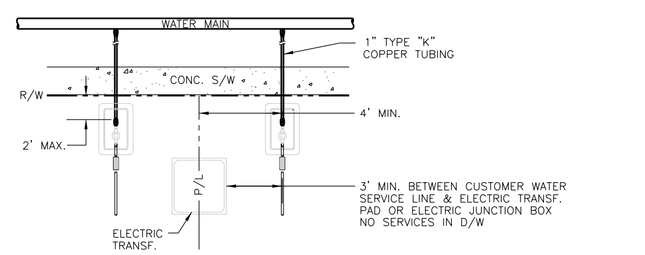


TYPICAL 1" SERVICE LOCATION (SHORT OR LONG)

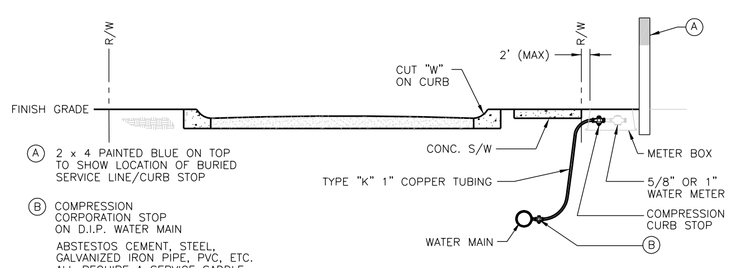


TYPICAL 1" SHORT SERVICE

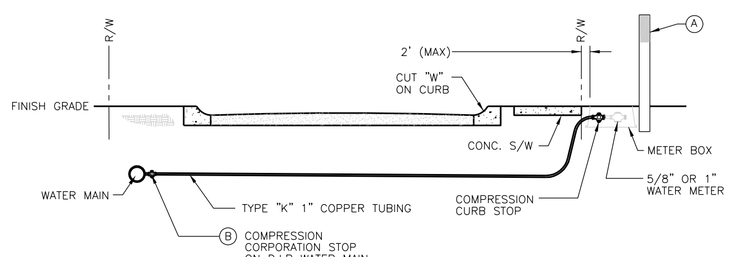


TYPICAL 1" LONG SERVICE

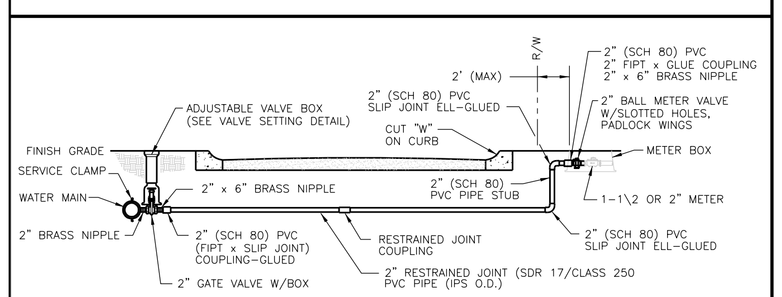


TYPICAL 2" NEW LONG SERVICE

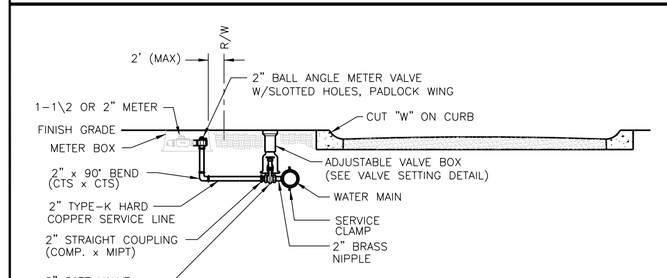


TYPICAL 2" NEW SHORT SERVICE

## SERVICE LINE NOTES

NOTE:

1. O.U.C. SHALL FURNISH/INSTALL ALL WATER METERS.
2. O.U.C. SHALL FURNISH METER BOXES, DEVELOPER'S CONTRACTOR TO INSTALL.
3. METER SHOULD BE ON THE CUSTOMER SIDE OF THE RIGHT-OF-WAY NO FURTHER THAN 2' BEYOND RIGHT-OF-WAY LINE AND ALWAYS ALONG THE BACK SIDE OF CONC. SIDEWALK.

LEGEND

DT DIRECT TAP MAY BE ALLOWED
SC SERVICE CLAMP IS REQUIRED
NA NOT ALLOWED
* ABSTESTOS CEMENT, STEEL, GALVANIZED IRON PIPE, PVC, ETC. ALL REQUIRE A SERVICE SADDLE.

| PIPE | SIZE | CORPORATION | TAP SIZE 1" | TAP SIZE 2" |
|---|---|---|---|---|
| D.I. | 12" | DT | SC | |
| | 10" | DT | SC | |
| | 8" | DT | SC | |
| | 6" | DT | SC | |
| | 4" | DT | SC | |
| PVC | 4" C-900 | SC | SC | |
| | 2"-SDR21 | SC | NA | |

TAPPING FOR 1" CORP. STOP, & 2" GATE VALVE

SPECIAL NOTICE:
PROCEDURES FOR AN O.U.C. SINGLE FAMILY HOME HAVING RECLAIM WATER SERVICE.

WHERE RECLAIM WATER IS PROVIDED TO A PROPERTY, O.U.C.'S POTABLE WATER SYSTEM MUST BE PROTECTED BY AN APPROVED DOUBLE CHECK VALVE ASSEMBLY BACKFLOW PREVENTER WITH TOP ACCESS (FOR TESTING AND MAINTENANCE), INSTALLED, OWNED AND MAINTAINED BY OUC.
NO CONNECTIONS ARE ALLOWED BETWEEN THE METER AND THE BACKFLOW PREVENTER.

PRIOR TO ANY RECLAIM WATER SERVICE INSTALLATION, INSPECTION AND TESTING WILL BE CONDUCTED BY A REPRESENTATIVE OF THE RECLAIM WATER PROVIDER TO MAKE CERTAIN THAT THE APPROPRIATE BACKFLOW DEVICE HAS BEEN INSTALLED ON THE DOMESTIC WATER SERVICE.

## BLOW OFF DETAILS

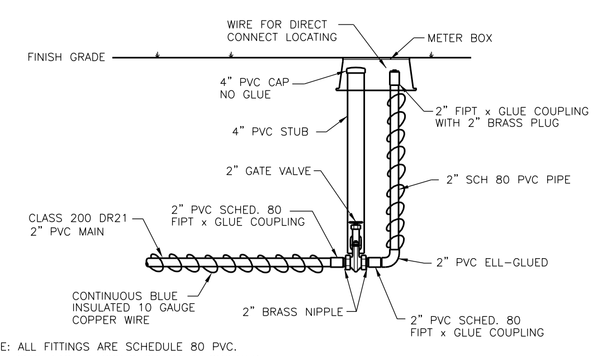


NOTE: ALL FITTINGS ARE SCHEDULE 80 PVC.
GLUE LAST 3 JOINTS OR ALL IF SHORTER.

2" PVC DEAD END WITH PERMANENT BLOW OFF

INSTALL ON ALL DEAD ENDS UNLESS OTHERWISE NOTED.

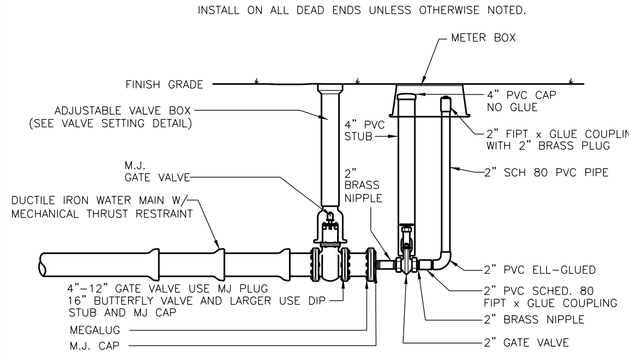


NOTE:
THIS IS A DEAD END BLOW-OFF,
NOT A "DISINFECTION/CHLORINATION" BLOW-OFF.

PERMANENT BLOW OFF (4" AND LARGER)

INSTALL ON ALL DEAD ENDS UNLESS OTHERWISE NOTED.

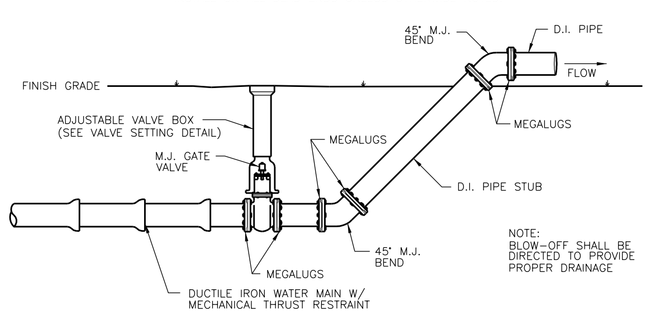


NOTE:
BLOW-OFF SHALL BE DIRECTED TO PROVIDE PROPER DRAINAGE

NOTE:
1. TEMPORARY BLOW-OFFS WILL BE INSTALLED SIZE FOR SIZE OF THE NEWLY INSTALLED MAIN UP TO 12".
2. M.J. PLUG/CAP SHALL BE INSTALLED WHERE APPLICABLE.

TEMPORARY BLOW OFF (4" THROUGH 12") FOR CONSTRUCTION PURPOSE

## RESTRAINED JOINT STANDARDS

CONTACT O.U.C. FOR SPECIAL RESTRAINT DETAILS FOR WORK ON EXISTING PIPING.

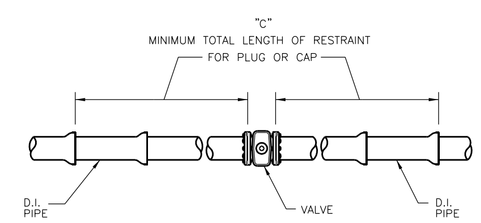


INLINE VALVE RESTRAINT

(TREAT AS PLUG OR CAP IN BOTH DIRECTIONS)

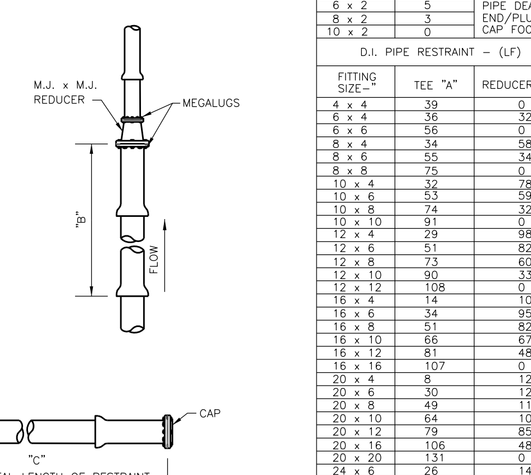


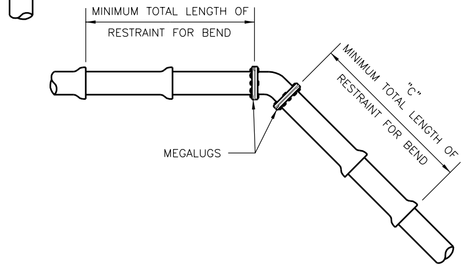


| 2" PVC - PIPE RESTRAINT (LF) | | |
|---|---|---|
| FITTING SIZE- | TEE "A" | REDUCER "B" |
| 2 x 2 | 11 | USE LARGE PIPE DEAD-END/PLUG/CAP FOOTAGE |
| 4 x 2 | 8 | |
| 6 x 2 | 5 | |
| 8 x 2 | 1 | |
| 10 x 2 | 0 | |

| D.I. PIPE RESTRAINT - (LF) | | |
|---|---|---|
| FITTING SIZE- | TEE "A" | REDUCER "B" |
| 4 x 4 | 39 | 0 |
| 6 x 4 | 36 | 32 |
| 6 x 6 | 56 | 0 |
| 8 x 4 | 34 | 58 |
| 8 x 6 | 55 | 34 |
| 8 x 8 | 75 | 0 |
| 10 x 4 | 32 | 78 |
| 10 x 6 | 53 | 59 |
| 10 x 8 | 74 | 32 |
| 10 x 10 | 91 | 0 |
| 12 x 4 | 29 | 98 |
| 12 x 6 | 51 | 82 |
| 12 x 8 | 73 | 60 |
| 12 x 10 | 90 | 33 |
| 12 x 12 | 108 | 0 |
| 16 x 4 | 14 | 104 |
| 16 x 6 | 34 | 95 |
| 16 x 8 | 51 | 82 |
| 16 x 10 | 66 | 67 |
| 16 x 12 | 81 | 48 |
| 16 x 16 | 107 | 0 |
| 20 x 4 | 8 | 129 |
| 20 x 6 | 30 | 122 |
| 20 x 8 | 49 | 112 |
| 20 x 10 | 64 | 100 |
| 20 x 12 | 79 | 85 |
| 20 x 16 | 106 | 48 |
| 20 x 20 | 131 | 0 |
| 24 x 6 | 26 | 148 |
| 24 x 8 | 45 | 140 |
| 24 x 10 | 61 | 130 |
| 24 x 12 | 76 | 117 |
| 24 x 16 | 104 | 87 |
| 24 x 20 | 130 | 48 |
| 24 x 24 | 154 | 0 |

MINIMUM FOOTAGE OF PIPE TO BE RESTRAINED.

| | DUCTLE IRON PIPE | | | | | | | | | | PVC PIPE |
|---|---|---|---|---|---|---|---|---|---|---|---|
| | RESTRAINT "C" (LF) | | | | | | | | | | |
| FITTING | 4" | 6" | 8" | 10" | 12" | 16" | 20" | 24" | 30" | 36" | 2" |
| 11-1/4" | 2 | 3 | 4 | 4 | 5 | 5 | 6 | 7 | 9 | 10' | 1 |
| 22-1/2" | 4 | 6 | 8 | 9 | 11 | 11 | 13 | 15 | 18 | 20' | 1 |
| 45° OFFSET | 9 | 12 | 16 | 19 | 22 | 22 | 26 | 31 | 36 | 42' | 3 |
| 90° | 21 | 29 | 38 | 46 | 53 | 53 | 64 | 74 | 88 | 101' | 6 |
| VALVE/PLUG/CAP | 44 | 61 | 80 | 96 | 113 | 112 | 136 | 159 | 191 | 221' | 13 |

MINIMUM FOOTAGE OF PIPE TO BE RESTRAINED.

NOTES:

1. ALL FITTINGS SHALL HAVE APPROPRIATE MECHANICAL THRUST RESTRAINT (WEDGE-ACTION OR FULL CIRCUMFERENCE ARTICULTING WEDGE, EQUAL TO 1100 SERIES MEGALUG OR STAR-GRIP)
2. ALL COMPONENTS OF RESTRAINING MECHANISMS FOR PUSH-ON OR MECHANICAL JOINTS SHALL BE OF CORROSION RESISTANT MATERIAL OR SUITABLY PROTECTED AGAINST CORROSION.
3. THE PIPE LENGTHS IMMEDIATELY ON EITHER SIDE OF A FITTING SHALL BE ADEQUATELY TIED TOGETHER USING PROPRIETARY LOCKING GASKETS SUCH AS FIELD LOC OR FAST GRIP GASKETS.
4. INSTALL FULL LENGTH JOINTS WITH TOTAL LENGTH EQUAL TO OR GREATER THAN SHOWN IN THE TABLE.
5. WHERE TWO OR MORE FITTINGS ARE TOGETHER, USE FITTING WHICH YIELDS GREATEST LENGTH RESTRAINED PIPE. ALL ROAD CROSSINGS SHALL BE RESTRAINED AT EACH JOINT.
6. THROUGH RUN OF TEES OUTSIDE LIMITS OF RESTRAINED JOINTS FROM OTHER FITTINGS NEED NOT BE RESTRAINED UNLESS OTHERWISE INDICATED.
7. LENGTHS SHOWN IN THE TABLE HAVE BEEN CALCULATED IN ACCORDANCE WITH THE PROCEDURE OUTLINED IN "THRUST RESTRAINT DESIGN FOR DUCTILE IRON PIPE" FOURTH EDITION 1997 AS PUBLISHED BY DIP, WITH THE FOLLOWING ASSUMPTIONS:
   THE MAXIMUM TEST PRESSURE IS 150 PI
   THE LAYING CONDITION IS TYPE 2 (BACKFILL COMPACTED TO TOP OF PIPE)
   DIP GLT # 1
   ALL BENDS ARE INSTALLED HORIZONTALLY
   THE PIPE IS DUCTILE IRON PIPE
   DEPTH OF COVER IS ASSUMED TO BE 3 FEET FOR 12" AND SMALLER WATER MAINS
   DEPTH OF COVER IS ASSUMED TO BE 4 FEET FOR 16" AND LARGER WATER MAINS
   NONE OF THE PIPE IS POLYWRAPPED.
8. FOR PVC PIPE (4") MULTIPLY THE DUCTILE IRON FOOTAGE BY 1.1.
9. ALL EXISTING PIPE SHALL BE RESTRAINED AS NEEDED AT EACH NEW CONNECTION.

## PVC PIPE DETAIL

(REFER TO GENERAL MATERIAL SPECIFICATIONS FOR LIMITATIONS ON USE)

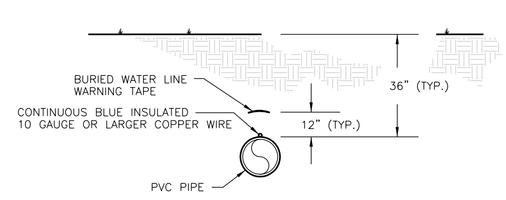


## VALVE SETTING

RESTRAINT REQUIRED FOR INLINE VALVES
(SEE RESTRAINED JOINT STANDARDS)

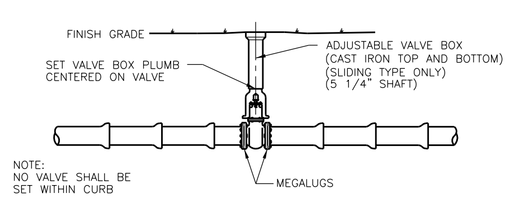


NOTE:
NO VALVE SHALL BE SET WITHIN CURB

## FIRE HYDRANT ASSEMBLY

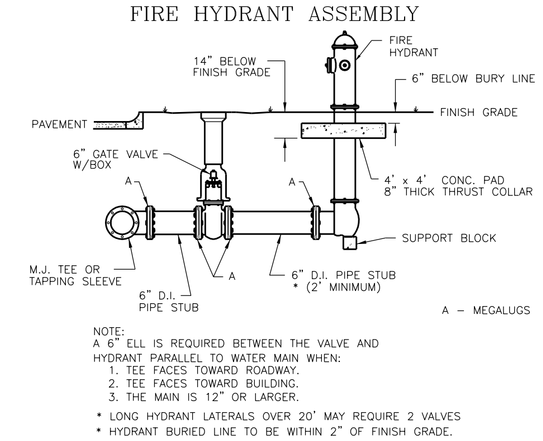


NOTE:
A 6" ELL IS REQUIRED BETWEEN THE VALVE AND HYDRANT PARALLEL TO WATER MAIN WHEN:
1. TEE FACES TOWARD ROADWAY.
2. TEE FACES TOWARD BUILDING.
3. THE MAIN IS 12" OR LARGER.

- LONG HYDRANT LATERALS OVER 20' MAY REQUIRE 2 VALVES
- HYDRANT BURIED LINE TO BE WITHIN 2" OF FINISH GRADE.

NO HYDRANT RISERS WILL BE PERMITTED ON NEWLY INSTALLED FIRE HYDRANTS.

## MAXIMUM ALLOWABLE LEAKAGE

NOTE: 150 PSI TESTING, 2 HOUR LEAKAGE TESTS;
MAXIMUM LEAKAGE ALLOWED PER 1000 LF OF PIPE.

| PIPE SIZE | DUCTILE IRON PIPE GALLONS PER TWO (2) HOUR | PVC PIPE GALLONS PER TWO (2) HOUR |
|---|---|---|
| 2" | 0.42 | 0.38 |
| 4" | 0.72 | 0.65 |
| 6" | 1.10 | N/A |
| 8" | 1.48 | |
| 10" | 1.84 | |
| 12" | 2.20 | |
| 16" | 2.94 | |
| 20" | 3.68 | |
| 24" | 4.42 | |
| 30" | 5.52 | |
| 36" | 6.62 | |
| 42" | 7.73 | |
| 48" | 8.83 | |

NOTE:
ANY PIPE LENGTH EQUAL TO OR LESS THEN 300' SHALL HAVE 0 LEAKAGE

## GENERAL SPECIFICATIONS

1. IT SHALL BE THE RESPONSIBILITY OF THE DEVELOPER/CONTRACTOR TO ENSURE THAT ALL REQUIRED PERMITS ARE IN-HAND BEFORE BEGINNING ANY CONSTRUCTION.
2. THE CONTRACTOR SHALL BE RESPONSIBLE FOR LOCATING AND VERIFYING ALL EXISTING UTILITIES PRIOR TO CONSTRUCTION, AND FOR NOTIFYING THE VARIOUS UTILITY COMPANIES TO MAKE THE NECESSARY ARRANGEMENTS FOR ANY RELOCATION, TEMPORARY DISRUPTION OF SERVICE, OR CLARIFICATION OF ACTIVITY REGARDING SAID UTILITY. THE CONTRACTOR SHALL EXERCISE CAUTION WHEN CROSSING AN UNDERGROUND UTILITY, WHETHER SHOWN ON THESE PLANS OR FIELD LOCATED. CONTRACTOR SHALL BE RESPONSIBLE FOR PROTECTING ALL EXISTING STRUCTURES OR UTILITIES FROM CONSTRUCTION OF WATER FACILITIES. CONTRACTOR SHALL COORDINATE ANY NECESSARY ADJUSTMENTS AND COOPERATE WITH THE OWNER.
   ANY DELAY OR INCONVENIENCE OF THE VARIOUS UTILITIES SHALL BE INCIDENTAL TO THE CONTRACT AND NO EXTRA COMPENSATION WILL BE ALLOWED.
3. ALL CONSTRUCTION OF THE WATER DISTRIBUTION SYSTEM SHALL MEET CURRENT ORLANDO UTILITIES COMMISSION SPECIFICATIONS FOR MATERIAL, INSTALLATION, AND DISINFECTION. ALL MATERIAL AND EQUIPMENT SHALL BE STORED, INSTALLED, AND USED IN ACCORDANCE WITH THE MANUFACTURER'S RECOMMENDATIONS.
   ALL WATER FACILITIES WILL BE IN COMPLIANCE WITH THE CONDITIONS OF FDEP PERMIT FOR THE PROJECT.
4. WATER MAIN SEPARATION FROM SEWER, STORM, AND RECLAIM LINES WILL BE IN COMPLIANCE WITH FDEP GUIDELINES.
   THE MINIMUM SEPARATION REQUIREMENTS FROM SANITARY FORCE MAINS, AT LEAST A 6' HORIZONTAL AND AN 12" VERTICAL SEPARATION AT CROSSINGS, MUST BE OBSERVED WITH NO STANDARD MITIGATION ALLOWED.
   A MINIMUM OF 18' SEPARATION FROM BUILDINGS AND STRUCTURES IS REQUIRED.
5. ALL ELECTRICAL CONDUIT TO BE A MINIMUM 2" FROM ALL WATER MAINS, AND APPURTENANCES.
6. THE RECLAIMED WATER MAIN SHALL BE ON THE OPPOSITE SIDE OF THE STREET FROM THE POTABLE WATER MAIN WHERE PRACTICAL. IF IT IS NOT PRACTICAL, THE RECLAIMED WATER MAIN SHALL BE INSTALLED AT A MINIMUM HORIZONTAL DISTANCE OF 3 FEET (EDGE TO EDGE) FROM THE POTABLE WATER MAIN. RECLAIMED WATER MAINS SHALL BE BELOW POTABLE WATER MAINS WITH A MINIMUM VERTICAL SEPARATION OF 12".
7. ALL HYDROSTATIC TESTING SHALL BE IN ACCORDANCE WITH ANSI/AWWA C600 FOR D.I. PIPE AND ANSI/AWWA C605 FOR PVC PIPE.
8. PROVISIONS ARE REQUIRED TO PROTECT EXISTING ACTIVE WATER MAINS FROM BACKFLOW CONTAMINATION DURING FILLING, FLUSHING, TESTING, AND MAINTAINING A PRESSURE IN THE NEW PIPING UNTIL A FDEP LETTER OF CLEARANCE IS OBTAINED.
9. THE DISINFECTION OF WATER MAINS SHALL BE IN COMPLIANCE WITH "RULES OF THE DEPARTMENT OF ENVIRONMENTAL REGULATION - CHAPTER 62-555 "PERMITTING AND CONSTRUCTION OF PUBLIC WATER SYSTEMS." THE PROCEDURE WILL MEET AND EXCEED THE REQUIREMENTS SET FORTH IN ANSI/AWWA STANDARDS C651.
   CHLORINATION IS A 5 DAY PROCESS, STARTING ON MONDAYS UNLESS APPROVED BY O.U.C.
10. CROSS CONNECTION CONTROL SHALL BE IN ACCORDANCE WITH RULES AND REQUIREMENTS OF THE DEPARTMENT OF ENVIRONMENTAL PROTECTION - CHAPTER 62-555 "PERMITTING AND CONSTRUCTION OF PUBLIC WATER SYSTEMS."
11. BACKFLOW PREVENTERS SHALL BE LOCATED NO MORE THAN 10 FEET FROM POINT OF SERVICE UNLESS PRIOR APPROVAL HAS BEEN RECEIVED FROM OUC CROSS CONNECTION CONTROL DEPT.
12. ALL OUC WATER DISTRIBUTION SYSTEM PIPE SHALL HAVE A MINIMUM OF THIRTY-SIX (36) INCHES OF COVER, UNLESS OTHERWISE DIRECTED BY THE OUC PROJECT ENGINEER OR THEIR REPRESENTATIVE.
13. A PRE-CONSTRUCTION MEETING FOR THE INSTALLATION OF WATER FACILITIES IS REQUIRED. CONTACT: OUC WATER CONSTRUCTION 407-649-4436.
14. ON NEWLY INSTALLED PIPE, ONLY ONE (1) REPAIR EVERY EIGHT-HUNDRED (800') FEET WILL BE PERMITTED. IF MORE THAN ONE REPAIR IS NECESSARY, THE PIPE WILL NEED TO BE REINSTALLED PER OUC STANDARDS. REPAIRS ARE TO BE MADE USING A MECHANICALLY RESTRAINED SLEEVE. BELL CLAMPS ARE NOT TO BE USED. ANY OTHER METHODS MUST BE APPROVED BY THE OUC ENGINEER.
15. ALL TAPS ON ACTIVE WATER MAINS SHALL BE PERFORMED BY AN OUC APPROVED TAPPING CONTRACTOR.
16. ALL OUC OWNED SERVICES ASSEMBLIES SHALL HAVE A MINIMUM OF 10' SEPARATION FROM STRUCTURES AND TREES.

## GENERAL MATERIAL SPECIFICATIONS

MATERIAL USED IN THE CONSTRUCTION OF THE WATER DISTRIBUTION SYSTEM SHALL ADHERE TO THE REQUIREMENTS OUTLINED IN THE OUC WATER DISTRIBUTION'S SPECIFICATION STANDARDS MANUAL. THE FOLLOWING INFORMATION IS TO PROVIDE GENERAL GUIDANCE IN THE PREPARATION OF CONSTRUCTION PLANS AND SPECIFICATIONS, AND IN NO WAY LIMITS OUC'S RIGHTS TO APPROVE OR DISAPPROVE PLANS, SPECIFICATIONS OF INSTALLATIONS. MOST CENTRAL FLORIDA UTILITY SUPPLY COMPANIES HAVE A COPY OF OUC'S SPECIFICATION STANDARDS MANUAL.

1. THE TYPICAL O.U.C. DISTRIBUTION SYSTEM PIPE SIZES AND MATERIAL USED ARE:
   - TWO INCH (2") WATER MAINS SHALL BE ASTM 2241 CLASS 200 SDR21 POLYVINYL CHLORIDE (PVC) PIPE.
   - TWO INCH (2") WATER MAIN UNDER ROADWAY REQUIRES 2" RESTRAINT JOINT SDR 17/CLASS 250 PIPE
   - FOUR INCH (4") WATER MAINS SHALL BE EITHER PRESSURE CLASS 350 DUCTILE IRON (D.I.) IN ACCORDANCE WITH ANSI/AWWA C150/A21.50-96 AND ANSI/AWWA C151/A21.51 OR, AS CONDITIONS WARRANT, C900 SDR18 CLASS 150 PVC PIPE.
   - SIX INCH (6") THROUGH TWENTY FOUR INCH (24") WATER MAINS SHALL BE PRESSURE CLASS 350 D.I. PIPE IN ACCORDANCE WITH ANSI/AWWA C150/A21.50 AND ANSI/AWWA C151/A21.51.
   - THIRTY INCH (30") AND LARGER WATER MAINS SHALL BE PRESSURE CLASS 250 D.I. PIPE IN ACCORDANCE WITH ANSI/AWWA C150/A21.50 AND ANSI/AWWA C151/A21.51.

   NOTE:
   1. THE USE OF 2" AND/OR 4" PVC PIPE MUST BE APPROVED BY O.U.C. WATER ENGINEERING.
   2. PVC PIPE MUST BE BLUE IN COLOR OR HAVING CONTINUOUS BLUE MARKINGS TO CONFORM TO AWWA COLORS WITH NSF LOGO FOR POTABLE WATER USE.
   3. DUCTILE IRON POTABLE WATER MAINS REQUIRE SPECIAL IDENTIFICATION. SUCH IDENTIFICATION SHALL INCLUDE A MINIMUM OF 4 CONTINUOUS STRIPES SPACED AT NO MORE THAN 90° AROUND THE PIPE .THE STRIPE SHALL BE MINIMUM TWO INCHES IN WIDTH FOR PIPE 4-12 INCH IN DIAMETER AND FOUR (4) INCHES IN WIDTH FOR LARGER PIPE , AND SHALL BE BLUE IN COLOR. BACKFILL SHALL NOT BE PLACED FOR AT LEAST 30 MINUTES FOLLOWING PAINT APPLICATION.
2. ALL PIPE FITTINGS 4" UP TO 30" SHALL BE CEMENT OR EPOXY LINED (CLASS 350) AWWA C53 "COMPACT" DUCTILE IRON, WITH MECHANICAL JOINT ENDS. ALL PIPE FITTINGS 30" OR LARGER SHALL BE CEMENT LINED (CLASS 250) DUCTILE IRON, WITH MECHANICAL JOINT ENDS.
3. A SERVICE MATERIAL FOR AND 1" SHALL INCLUDE SOFT ANNEALED TYPE-K COPPER TUBING.
   B SERVICE MATERIAL FOR 2" SHORT SIDE SERVICES SHALL INCLUDE 2" CTS TYPE-K HARD COPPER PIPE.
   C SERVICE MATERIAL FOR 2" LONG SIDE SERVICES SHALL INCLUDE 2" RESTRAINED JOINT (SDR 17/CLASS 250) PVC PIPE (IPS-O.D.).
4. SERVICE MATERIAL (CORP. STOPS, CURB STOPS, ETC.) FOR 1", AND 2" SERVICES SHALL BE BRASS COMPRESSION FITTINGS IN ACCORDANCE W/AWWA C800. FLARED FITTINGS ARE ACCEPTABLE UNDER CONTROLLED CONDITIONS. AN AWWA (CC) THREADING IS REQUIRED ON ALL 1" CORPORATION STOPS USED WITH DIRECT PIPE TAPPING ON DUCTILE IRON PIPE OR WITH SERVICE CLAMPS ON PVC PIPE. INSTALLATION OF 2" SERVICES REQUIRE SERVICE CLAMPS AND TO ACCOMMODATE 1 1/2" OR 2" METERS, 2" BALL ANGLE METER VALVES (CTS X FLANGE) WITH SLOTTED HOLES ON THE FLANGE FACE ARE REQUIRED. PADLOCK WINGS MUST BE INCLUDED ON EACH CURB STOP OR BALL METER VALVE.
5. FIRE HYDRANTS SHALL BE TRAFFIC DRY BARREL TYPE AND MEET OUC SPECIFICATIONS.
6. ALL VALVES 4" THROUGH 12" SHALL BE RESILIENT SEAT/WEDGE GATE VALVES WITH EPOXY COATING INTERNALLY/EXTERNALLY AND CONFORM TO ANSI/AWWA STANDARD C509 OR LATEST REVISION. ALL VALVES 16" AND LARGER SHALL BE BUTTERFLY, HAVE EPOXY COATING AND CONFORM TO ANSI/AWWA C504 OR LATEST REVISION.
7. ALL VALVE BOXES SHALL BE CAST IRON SLIDING TYPE. SCREW TYPE ARE NOT APPROVED.

SPECIAL NOTICE: OUC SPECIFICATIONS OFTEN ADD TO THE MANUFACTURER'S SPECIFICATIONS. IF YOU HAVE ANY QUESTIONS, PLEASE CONTACT:
OUC WATER DISTRIBUTION STANDARDS AND SPECIFICATIONS

(407) 244-8786 OR VISIT OUR WEB SITE AT: http://www.ouc.com/vendor

OUC The Reliable One

ORLANDO UTILITIES COMMISSION
WATER BUSINESS UNIT
100 West Anderson Street Orlando, FL. 32801

| | |
|---|---|
| ENG. GRUBBS | WATER DETAIL SHEET INSTALLATION INSTRUCTIONS |
| DRAWN GRIFFIN | |
| DATE 02-02-09 | |
| W.R. No. N/A | |
| ACAD No. N/A | |
| SCALE N.T.S. | FILE WDS2008 / MAP SEC. N/A |

REVISIONS

| No. | DATE | DESCRIPTION | APP'D BY |
|---|---|---|---|
| 1 | 03-31-09 | CITY OF ORLANDO COMM. | QTL |
| 2 | 05-11-09 | ADD OUC NOTES | QTL |
| 3 | 08-04-09 | CITY OF ORLANDO COMM. (BLD2009-03635) | QTL |
| 4 | 09-18-09 | CITY OF ORLANDO BLD2009-00444 COMM. | QTL |
| 5 | 10-02-09 | FDOT UTILITY PERMIT | QTL |

FIRST HAITIAN FREE CHURCH OF NAZARENE BY FAITH RENOVATION

POTABLE WATER DETAILS


LAM Civil Engineering, Inc.
2504 E. JACKSON STREET
ORLANDO, FL 32803
OFFICE: 407-228-9540
FAX: 407-228-9541
CERTIFICATE OF AUTHORIZATION No. 27340



THIS DOCUMENT AND ANY DESIGN DOCUMENTS RELATED TO THIS PROJECT IS THE PROPERTY OF LAM CIVIL ENGINEERING, INC. AND IS COPYRIGHTED. THIS DOCUMENT IS INTENDED TO BE USED BY THIS PROJECT, ANY REPRODUCTION, DISTRIBUTION, OR USE OF THIS DOCUMENT IS PROHIBITED WITHOUT THE WRITTEN CONSENT OF LAM CIVIL ENGINEERING, INC.


NOT FOR CONSTRUCTION UNLESS SIGNED AND SEALED

QUANG T. LAM, P.E.
FL REGISTRATION No. 62550

DATE

| | |
|---|---|
| PROJECT No. | 2008.999.07 |
| DATE: | 11-05-09 |
| DRAWN BY: | LCE |
| APPROVED BY: | QTL |
| SHEET | C6 |