COPYRIGHT - 2008 - RAMOSMARTINEZ architects, inc.
All ideas, designs and details indicated or represented by this drawing, created and developed for use on this project, are owned by, and are legal property of RamosMartinez Architects, Inc. Use, reproduction, distribution or alteration is prohibited without written authorization from the Architect

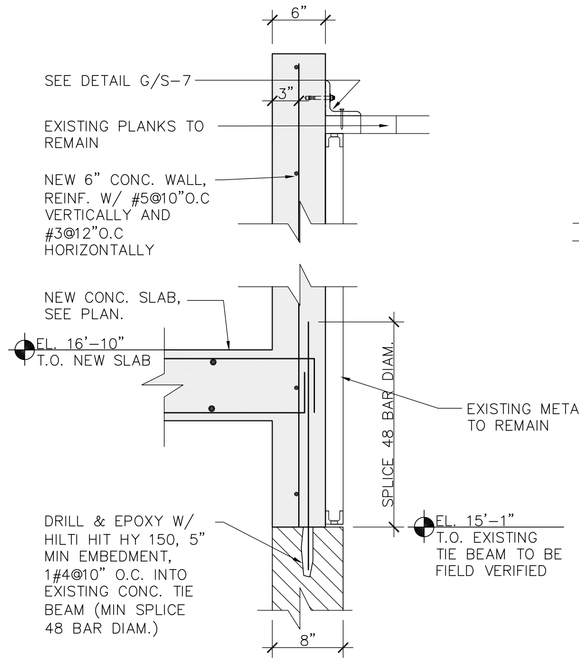

7 SECTION S-7 SCALE: 1" = 1'-0"

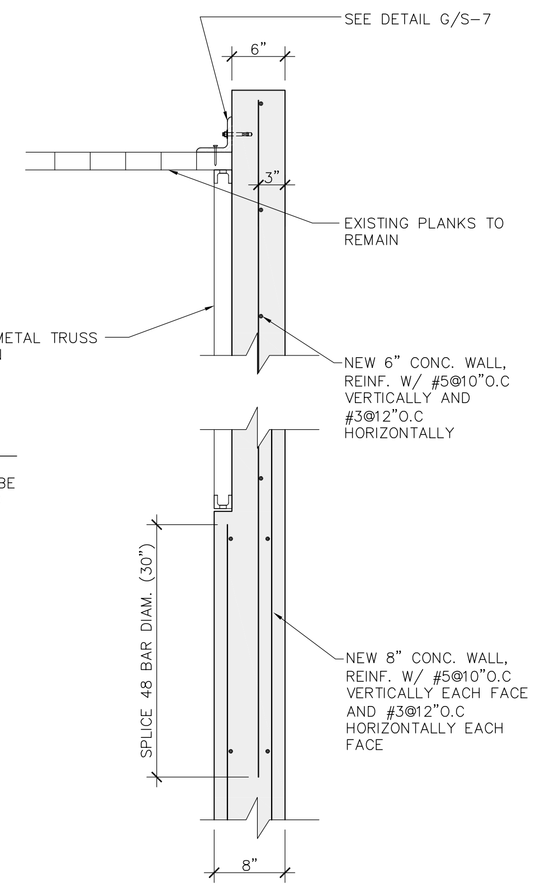

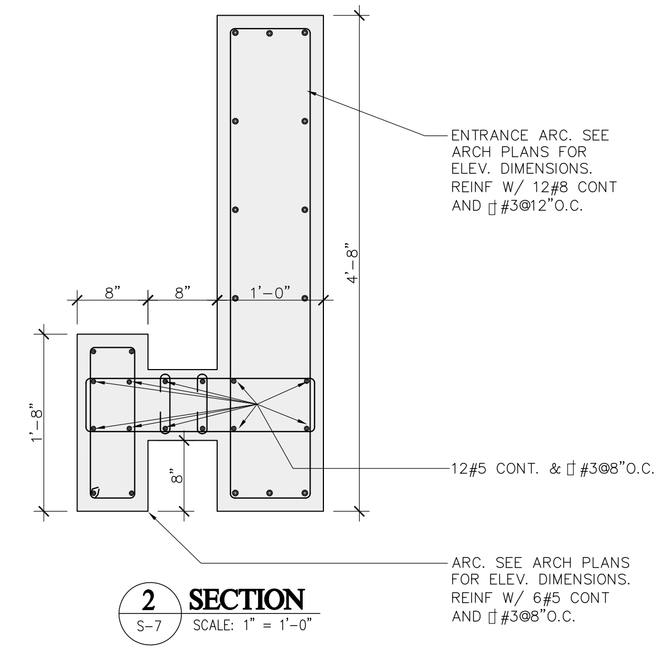

2 SECTION S-7 SCALE: 1" = 1'-0"

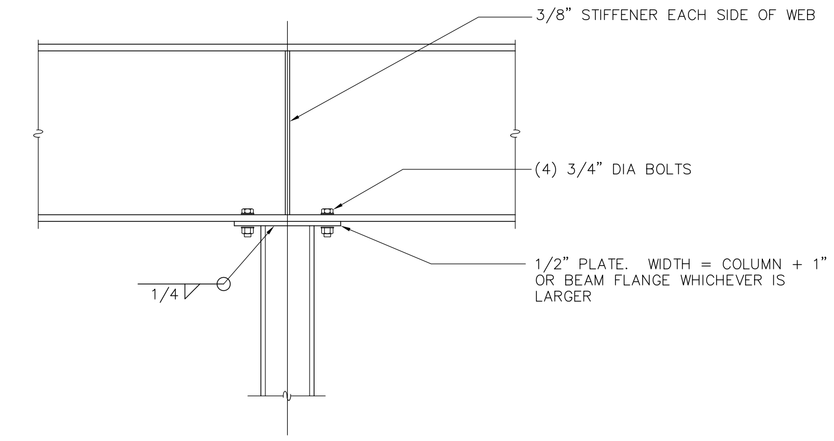

D DETAIL S-7 SCALE: 1" = 1'-0"

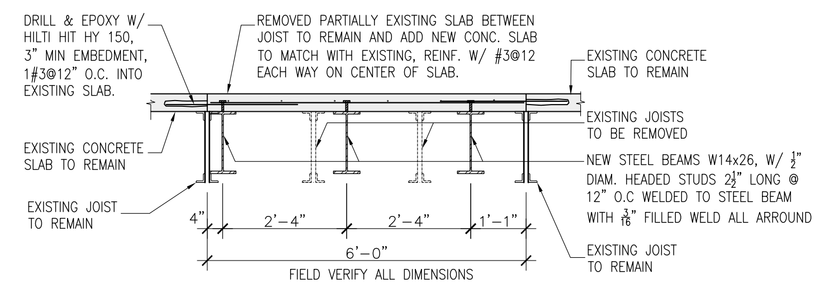

1 SECTION S-7 SCALE: 1/2" = 1'-0"

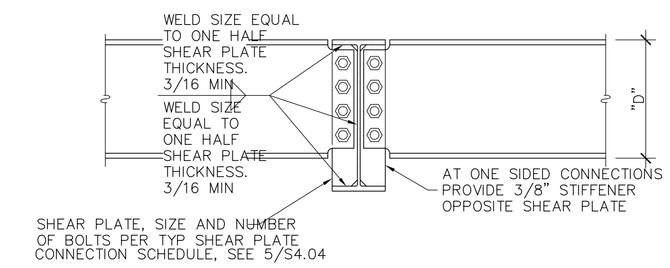

C DETAIL S-7 SCALE: 1" = 1'-0"

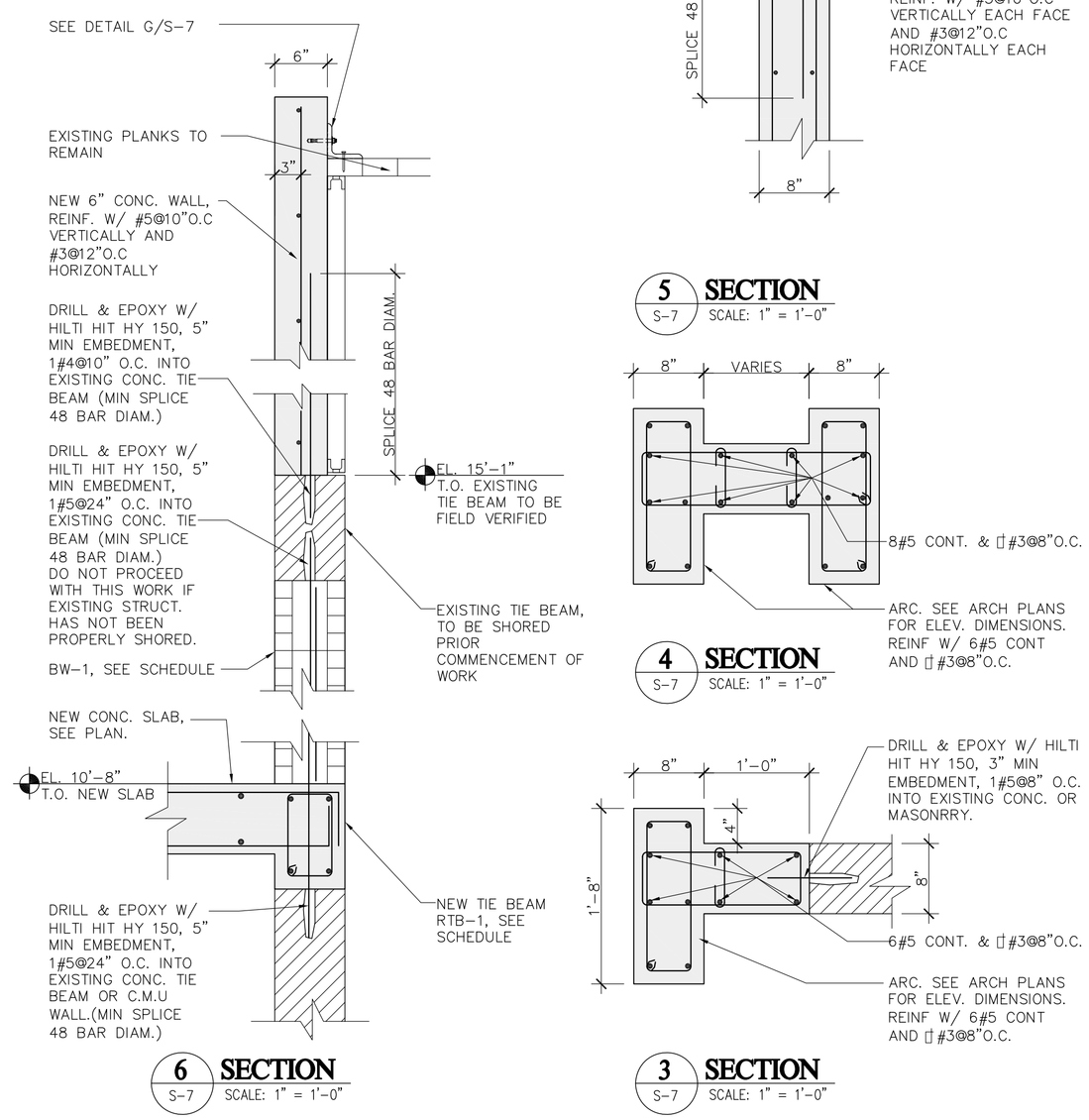

6 SECTION S-7 SCALE: 1" = 1'-0"

5 SECTION S-7 SCALE: 1" = 1'-0"

4 SECTION S-7 SCALE: 1" = 1'-0"

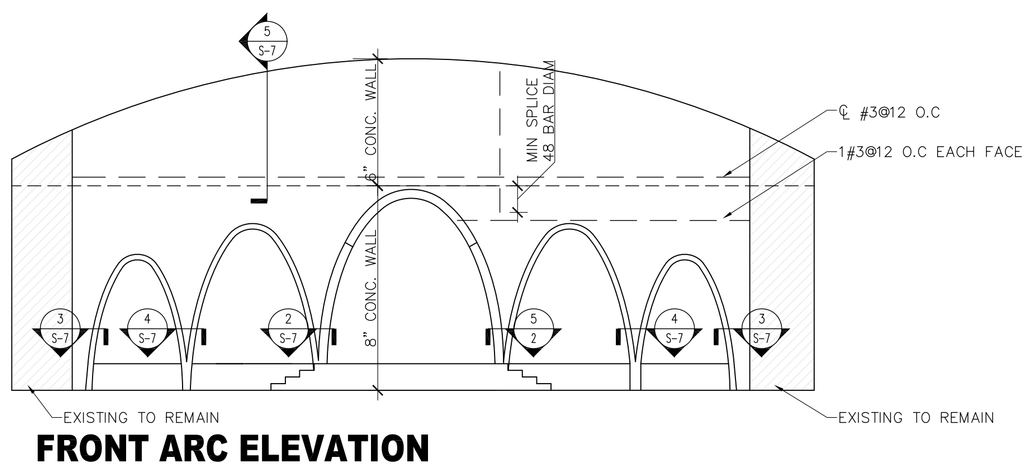

FRONT ARC ELEVATION

1 0 4 8 12 24 SCALE: 1/8" = 1'-0"

3 SECTION S-7 SCALE: 1" = 1'-0"

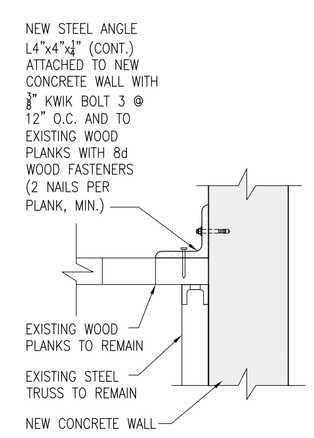

G DETAIL S-7 N.T.S

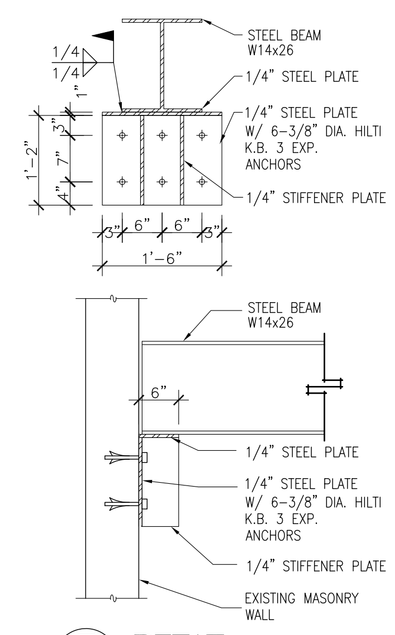

F DETAIL S-7 SCALE: 3/4" = 1'-0"

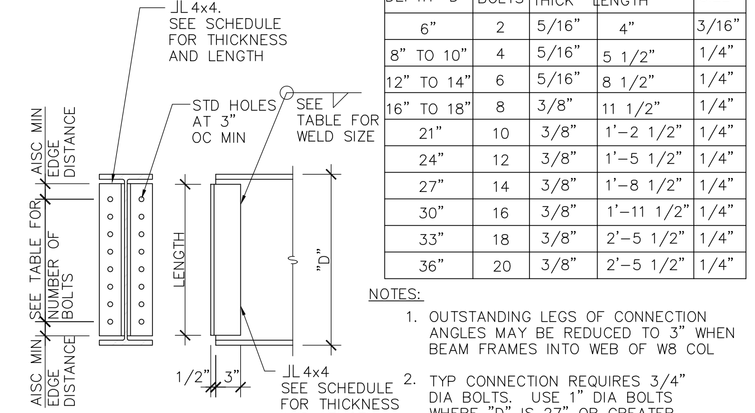

NOMINAL BEAM DEPTH "D"	No. OF A325 BOLTS	CONNECTION ANGLES THICK	CONNECTION ANGLES LENGTH	WELD SIZE
6"	2	5/16"	4"	3/16"
8" TO 10"	4	5/16"	5 1/2"	1/4"
12" TO 14"	6	5/16"	8 1/2"	1/4"
16" TO 18"	8	3/8"	11 1/2"	1/4"
21"	10	3/8"	1'-2 1/2"	1/4"
24"	12	3/8"	1'-5 1/2"	1/4"
27"	14	3/8"	1'-8 1/2"	1/4"
30"	16	3/8"	1'-11 1/2"	1/4"
33"	18	3/8"	2'-5 1/2"	1/4"
36"	20	3/8"	2'-5 1/2"	1/4"

NOTES:
1. OUTSTANDING LEGS OF CONNECTION ANGLES MAY BE REDUCED TO 3" WHEN BEAM FRAMES INTO WEB OF W8 COL
2. TYP CONNECTION REQUIRES 3/4" DIA BOLTS. USE 1" DIA BOLTS WHERE "D" IS 27" OR GREATER. SEE GSN FOR BOLT MATERIAL SPEC
3. MAINTAIN BOLT SPACING AND EDGE DISTANCES PER AISC SPEC

B DETAIL S-7 SCALE: 1" = 1'-0"

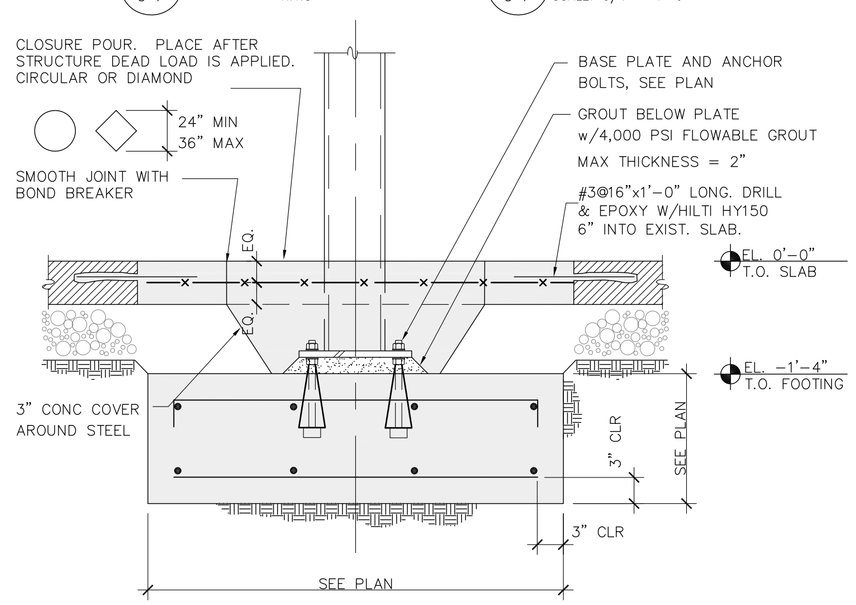

E DETAIL S-7 SCALE: 1/4" = 1'-0"

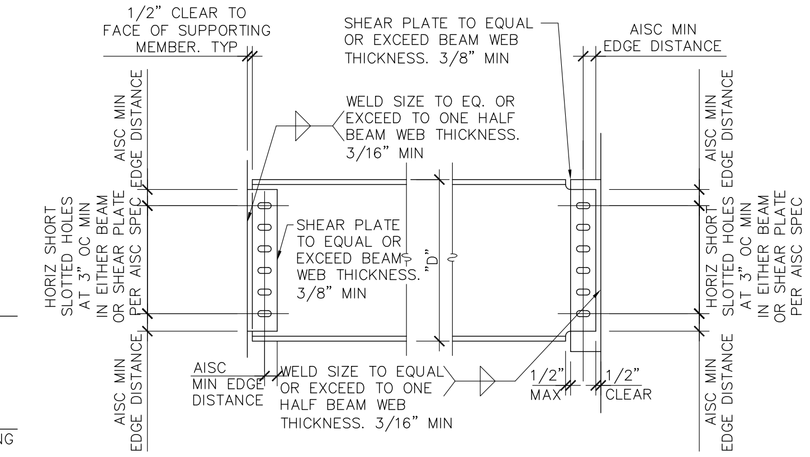

NOMINAL BEAM DEPTH "D"	No. OF BOLTS IN ROW
UP TO 7"	2
8" TO 10"	2
12" TO 14"	3
16"	4
18"	5

NOMINAL BEAM DEPTH "D"	No. OF BOLTS IN ROW
21"	6
24" TO 27"	7
30"	8
33" TO 35"	9
36"	10

NOTE:
1. TYP CONNECTION CONSISTS OF ONE SHEAR PLATE WITH 3/4" DIA A325 BOLTS. USE 1" DIA BOLTS WHERE "D" = 27" OR GREATER. SEE GSN FOR BOLT MATERIAL SPEC
2. MAINTAIN BOLT SPACING AND EDGE DISTANCES PER AISC SPEC

A DETAIL S-7 SCALE: 1" = 1'-0"

RAMOSMARTINEZ
A R C H I T E C T S, I N C. AA26000528
MIAMI
327 N.W. 12th AVENUE
MIAMI, FL 33136
TELEPHONE: 305-546-3006
FACSIMILE: 305-546-3220
WEBSITE: www.ramosmartinez.com
NEW YORK
11 ERIE STREET
JERSEY CITY, NJ 07302

First Haitian Free Church of Nazarene
IN
ORLANDO, FLORIDA

FIRST HAITIAN FREE CHURCH OF NAZARENE

308 SOUTH ORANGE BLOSSOM TRAIL
ORLANDO, FLORIDA

Eastern Engineering Group
3401 NW 82nd Ave. Suite 370
Miami, FL 33122
P: (305) 599-8133
F: (305) 599-8076
www.easternegi.com

☐ RAISSA LOPEZ, P.E. LIC No. 59399
☐ GONZALO A. PAZ, P.E. LIC No. 60734

REVISIONS:
1 Building Department Comments 03-26- 09

COMM. NO. 08-103
DATE: 07 MAR 08
DRAWN BY:
CHECKED BY:

ARCH ELEV., SECTIONS AND DETAILS.

S - 7